Assembly instructions

A3		1PC
B3		1PC
C3		1PC
D3		1PC
A4		2PCS
B4		2PCS
C4		2PCS
D4		2PCS
F	M6*35	36PCS
G	M6*55	6PCS
J	M6	51PCS
L	M6	6PCS
N		1PC
O		1PC
R	M6*40	3PC

Right-Sofa

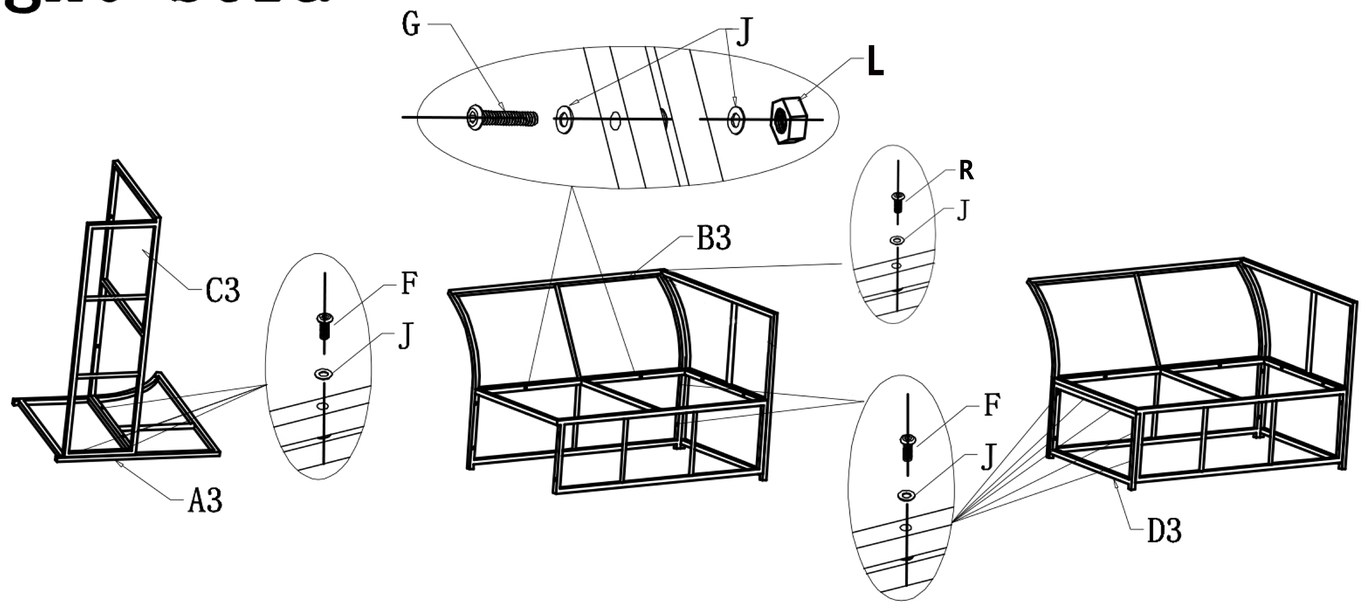

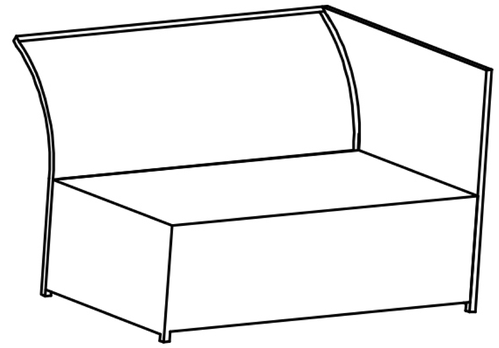

Left-Sofa

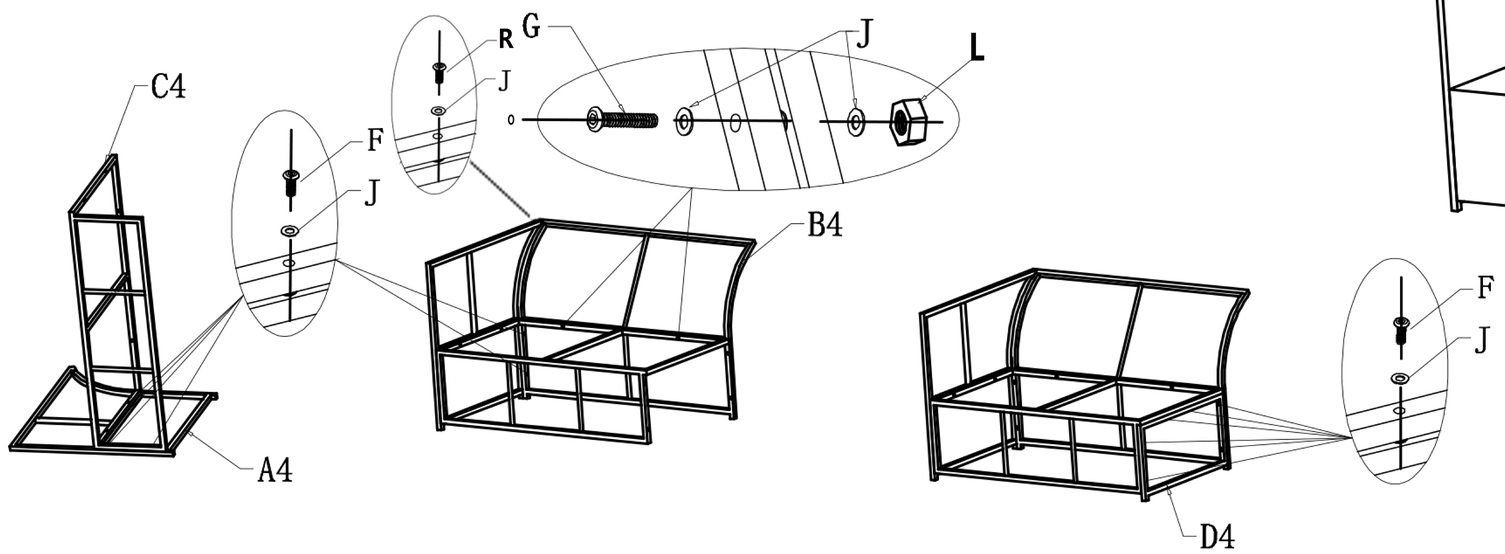

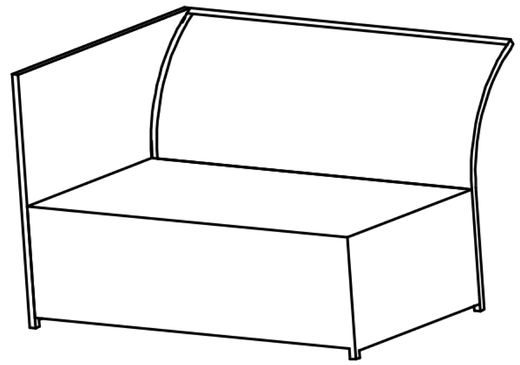

Assembly instructions

A1		2PCS
B1		4PCS
C1		4PCS
A2		2PCS
B2		2PCS
C2		1PC
D2		1PC
E	M6*15	12PCS
F	M6*35	24PCS
H	M8*65	2PCS
J	M6	36PCS
K	M8	2PCS
M	M8	4PCS
N		1PC
O		1PC

Ottoman

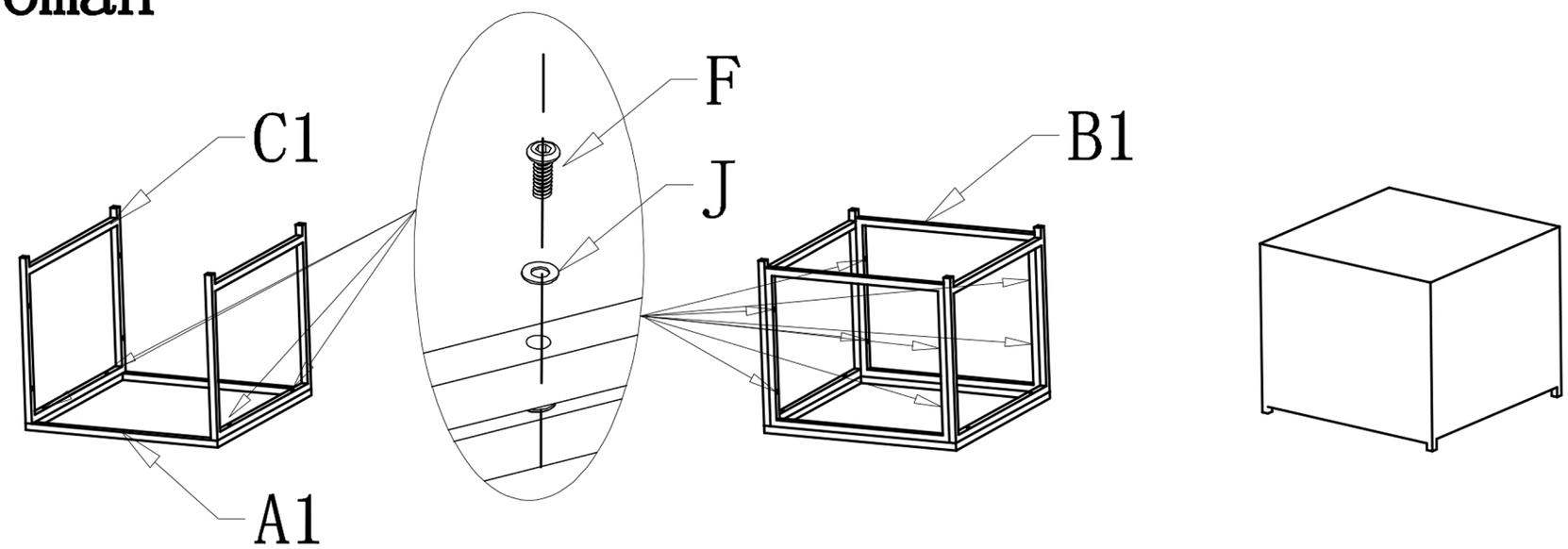

Table

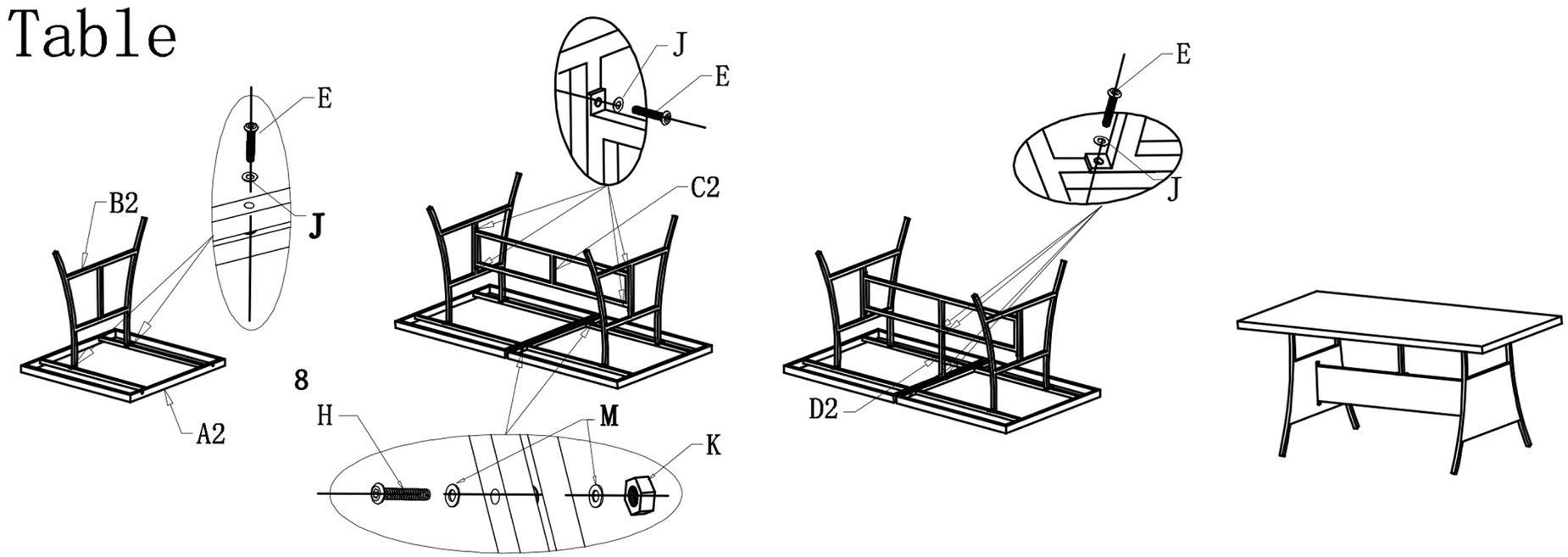

P	M8	1PC	Q	M8	1PC